Headlight Switch (cont'd)

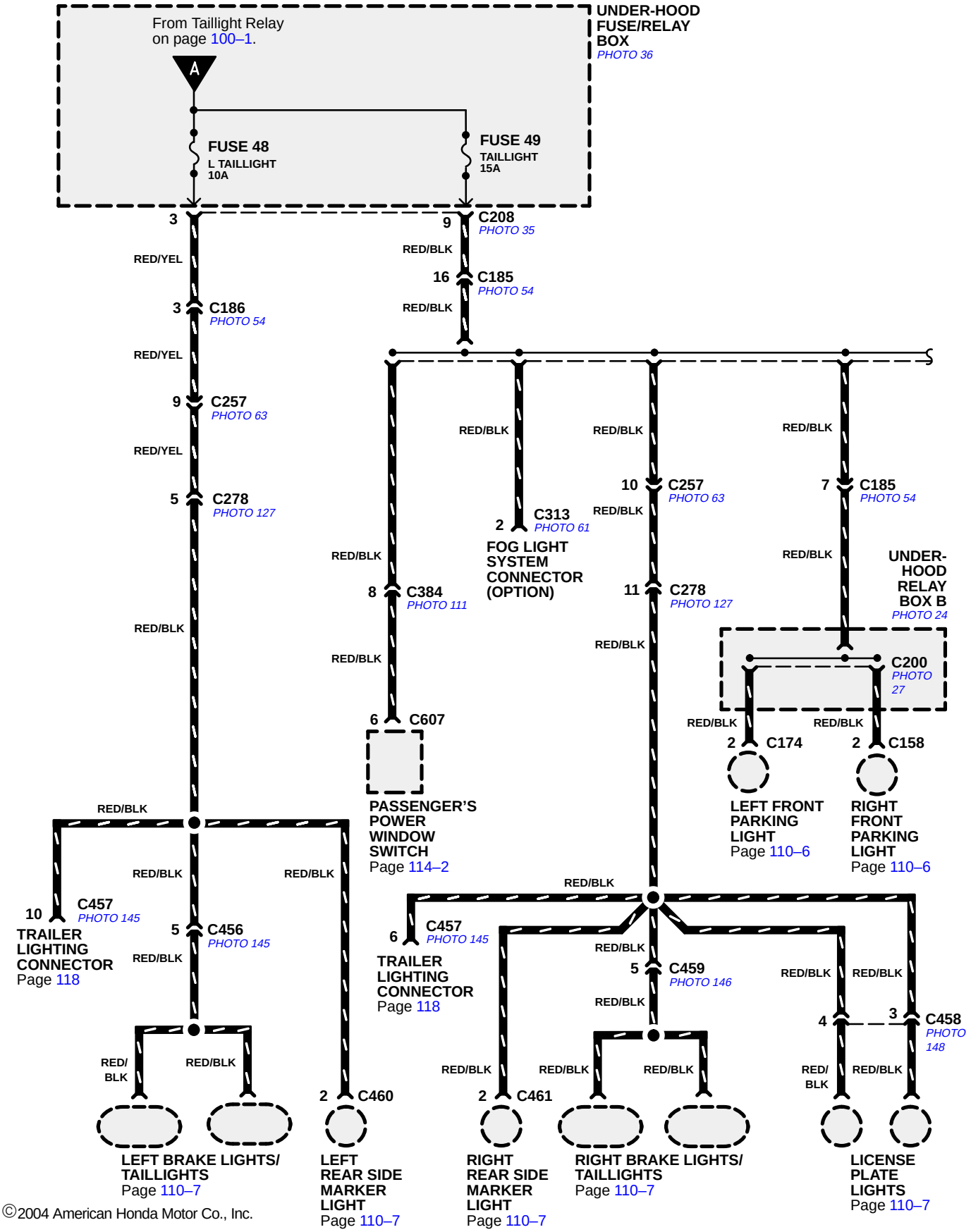

©2004 American Honda Motor Co., Inc.